SINK PLUMBING FOR SHELF CABINET, UK

WHAT IS THE PROCESS?

1

Your plumber:
Runs feed and waste pipes to the correct location

2

Grillo install team:
Install your outdoor kitchen units

3

Your plumber:
Makes the final connections

WHAT DO GRILLO SUPPLY?

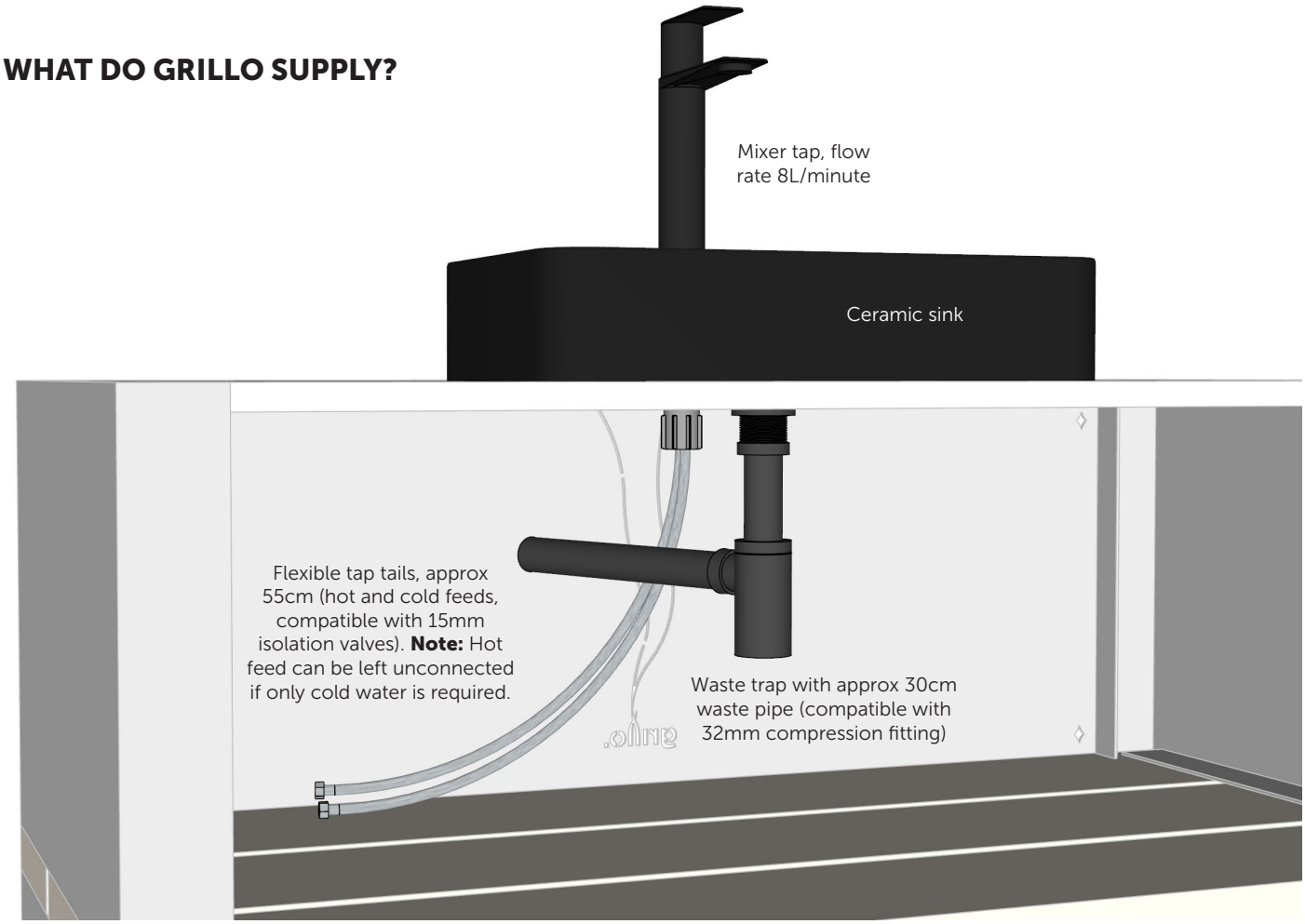

PIPEWORK POSITIONING

Example install diagram:
Large units are 1200 x 610mm.
Small units are 610 x 610mm.

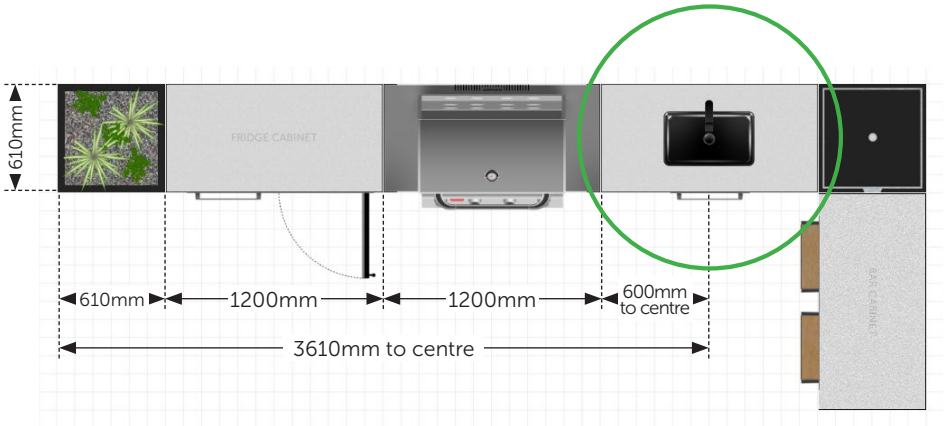

PIPEWORK ROUTING OPTIONS

There are a number of options for routing the pipework. Note that most configurations require permanent modifications to the sink unit, so you must agree a route with your plumber before he commences work.

Option A

Run the pipework through the rear fascia by removing the upper fascia cutout*.

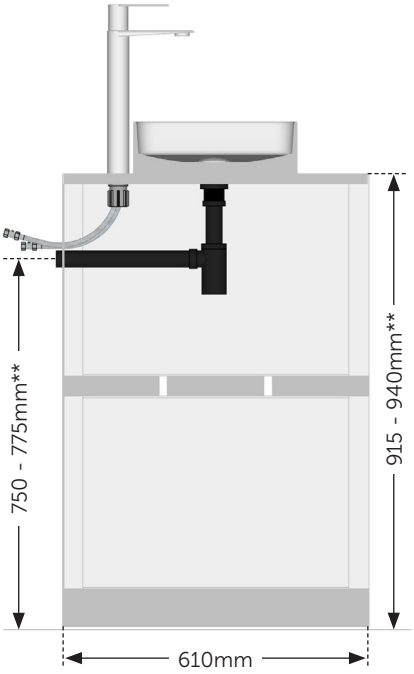

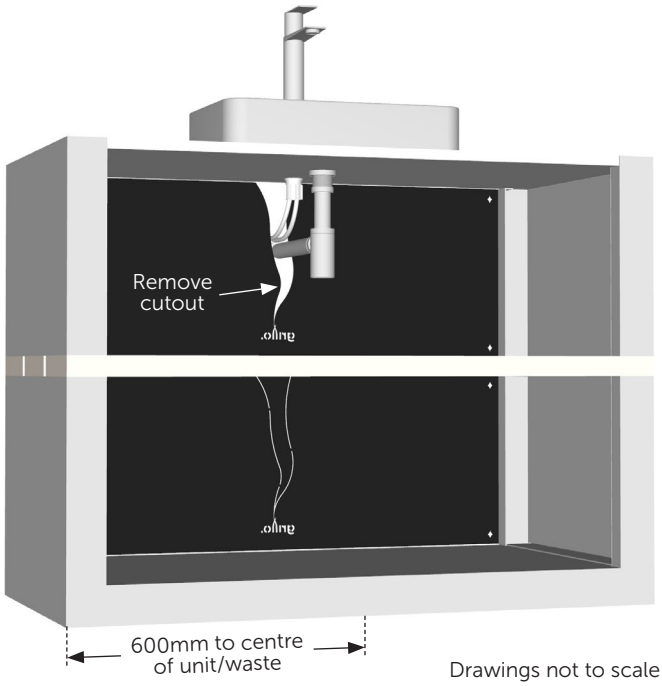

Drawings not to scale

Option B

Run the pipework (we recommend using flexible waste pipe) through the base by drilling through the iroko shelf and removing the base cutout*.

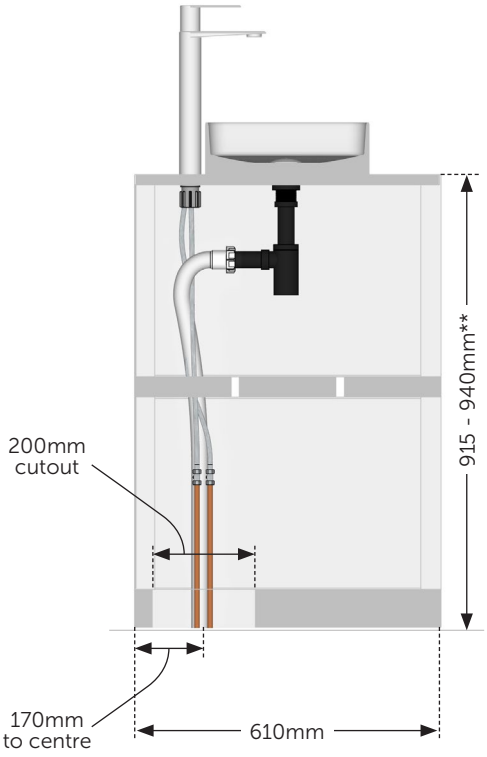

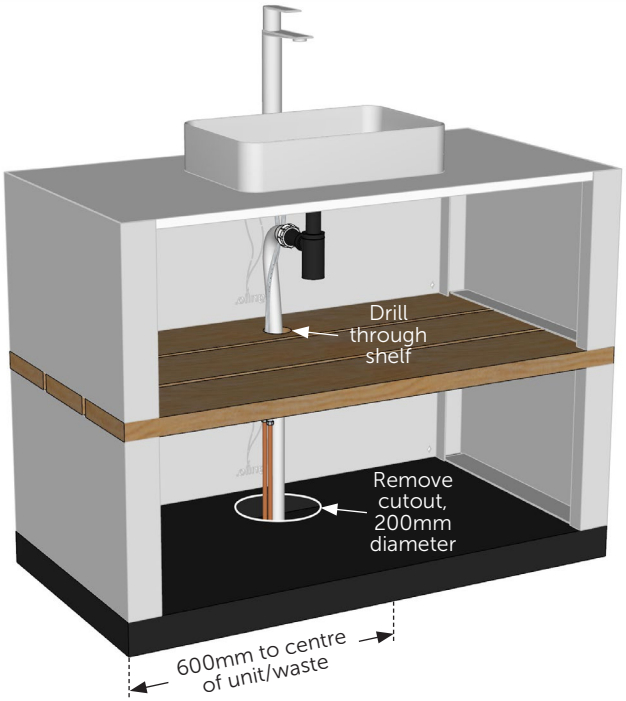

Drawings not to scale

*Please ensure you paint over any exposed steel with the touch-up paint.
**The height variation is for the adjustment provided in the cabinet feet.

Option C

Run the pipework (we recommend using flexible waste pipe) through the rear fascia by drilling through the iroko shelf and removing the lower fascia cutout*.

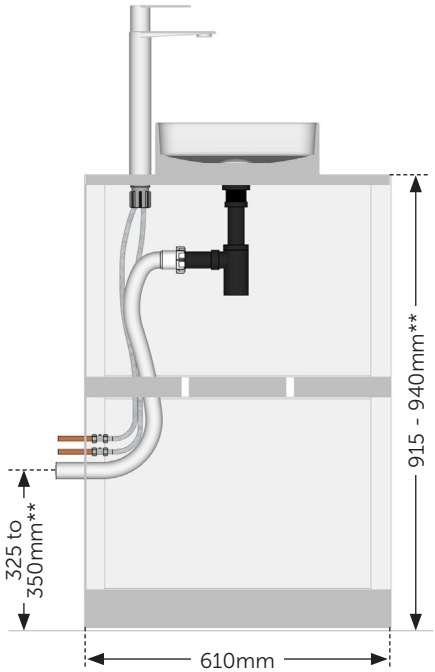

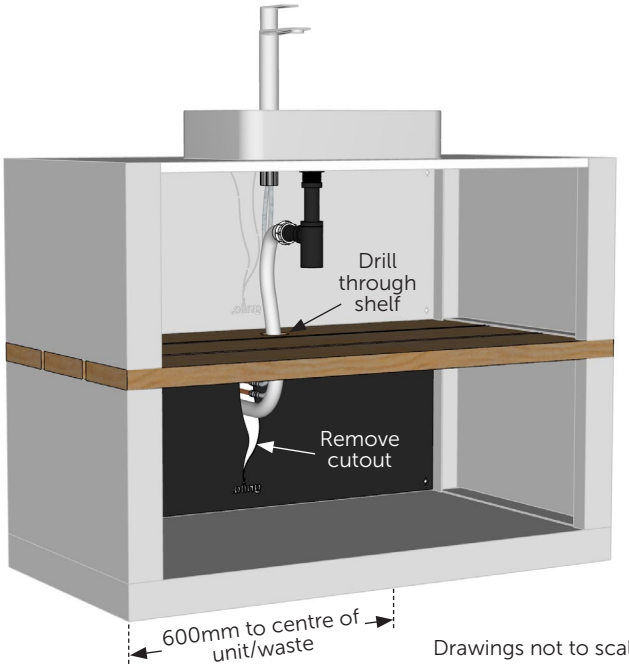

Drawings not to scale

Option D

Run the pipework (we recommend using flexible waste pipe) through the back of the unit by drilling through the iroko shelf and removing the lower rear fascia. We recommend this is only done where the rear of the kitchen will not be seen and the front will be covered by doors or crates.

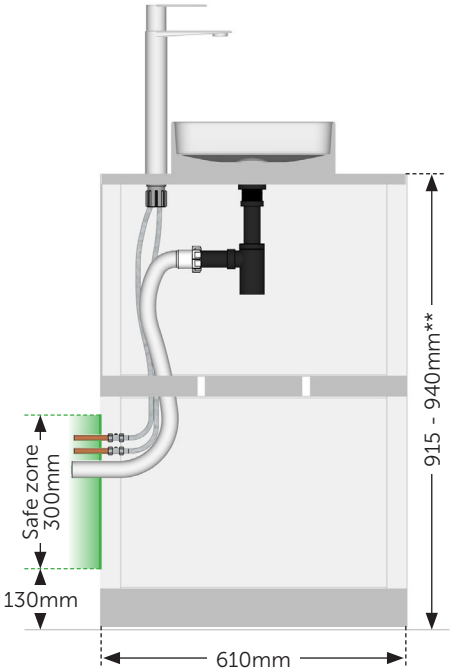

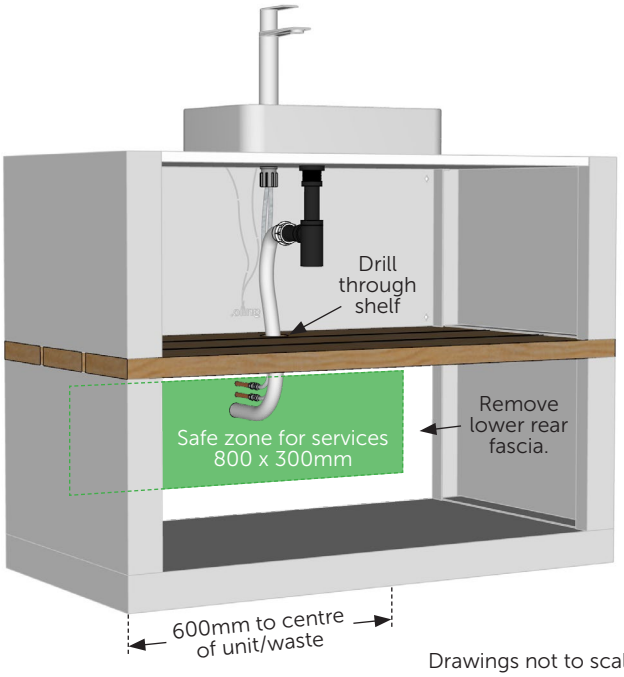

Drawings not to scale

*Please ensure you paint over any exposed steel with the touch-up paint provided.
**The height variation is for adjustment in the cabinet feet.

WINTERISE YOUR SINK

Draining the pipework for winter

Turn the water supply off at the stopcock; open the tap; drain it using the drain cock; leave the tap open.
Alternatively: turn off the water supply to the tap; disconnect the tap tails; open the tap to drain.

